"WE MAKE THE KITCHEN BETTER!"

ATOSA USA, INC.
Toll Free: 855-855-0399 Email: info@atosausa.com
www.atosa.com | www.atosausa.com
California, Colorado, Florida, Georgia, Illinois,
New Jersey, Ohio, Texas, Washington

Black Exterior Sliding Glass Door Refrigerator Merchandisers

MODELS:

MCF8727GR / MCF8729GR

MCF8727GR

MCF8729GR

Standard Features

- Black steel exterior with stainless steel interior
- Lighted header panel
- LED interior lighting standard
- Electronic Temperature Controller
- Maintains temperatures between 35°F – 38°F
- Four (4) shelves standard per section
- Double pane sliding glass doors
- Recessed door handles
- Magnetic door gasket
- Self-contained bottom mount refrigeration system with environmentally friendly R290 refrigerant
- Pre-installed casters
- Pre-installed shelves
- NEMA 5-15 plug standard

Optional Accessories

- Extra shelves – includes 4 shelf clips per shelf
- MCF8727GR – shelf part#: W0402327 (Left), W0402328 (Right)
- MCF8729GR – shelf part#: W0402395, W0402396 (Middle)

For the best results of food preservation we recommend setting your refrigerator between 35°F to 38 °F

1. Don't forget to leave the unit some room to breathe!
2. Please clean the condenser frequently to give the unit more fresh air.

Model #	Lighted header panel overall dimensions	Lighted header panel visual dimensions
MCF8727GR	$52^{3/12}\times9^{1/16}\times1/8$	$51^{9/16}\times8^{7/16}$
MCF8729GR	$81^{7/16}\times9^{1/16}\times1/8$	$80^{9/16}\times8$

2 YEAR PARTS AND LABOR WARRANTY
5 YEAR COMPRESSOR PART WARRANTY

REV. 09/24

ATOSA USA, INC.
Toll Free: 855-855-0399 Email: info@atosausa.com
www.atosa.com | www.atosausa.com
California, Colorado, Florida, Georgia, Illinois,
New Jersey, Ohio, Texas, Washington

"WE MAKE THE KITCHEN BETTER!"

SPECIFICATIONS

Models	Door	Capacity (Cu.Ft.)	Shelves	Casters (inch)	Rated Current (A)	Voltage (V/Hz/Ph)	HP	Refrigerant	Exterior Dimensions (inch)	Net Weight (lb)	Gross Weight (lb)
MCF8727GR	2	44.9	8	2	4.2	115/60/1	1/4	R290	$54^{2/5}\times29^{7/10}\times81^{1/5}$	456	511
MCF8729GR	3	64.4	12	2	6.5	115/60/1	1/2	R290	$81^{7/8}\times29^{3/4}\times81^{3/8}$	547	705

PLAN VIEW

MCF8727GR

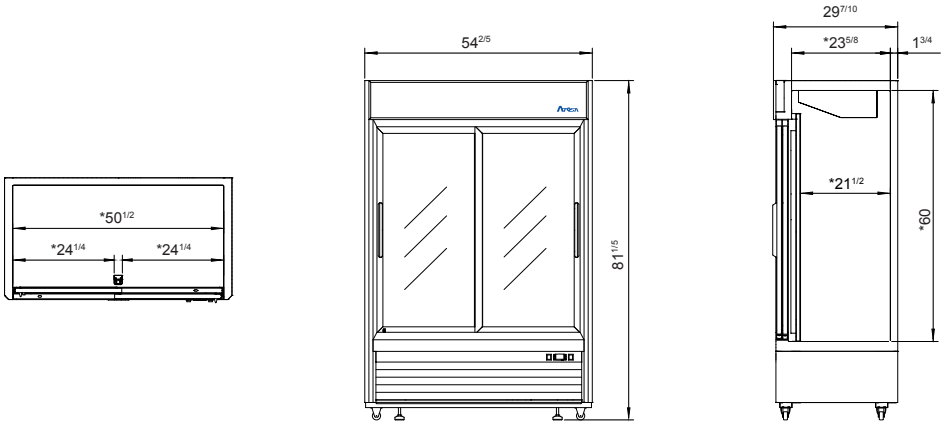

*Interior Dimensions

MCF8729GR

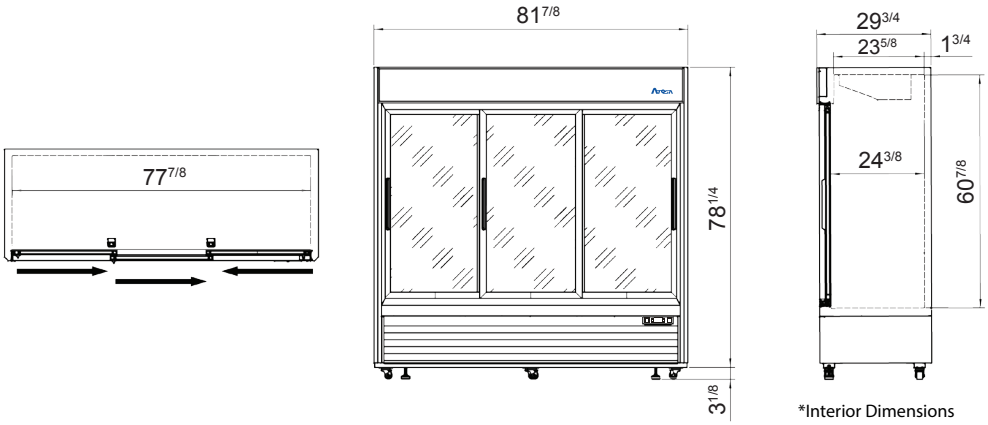

*Interior Dimensions

Casters

Temperature control

LED lights

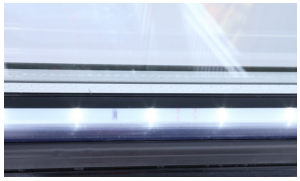

Epoxy shelves

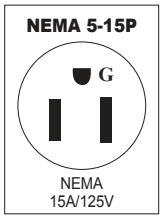

Atosa is continuously improving products. Specifications are subject to change without notice.